Normal Headroom

2" Track
3" Track

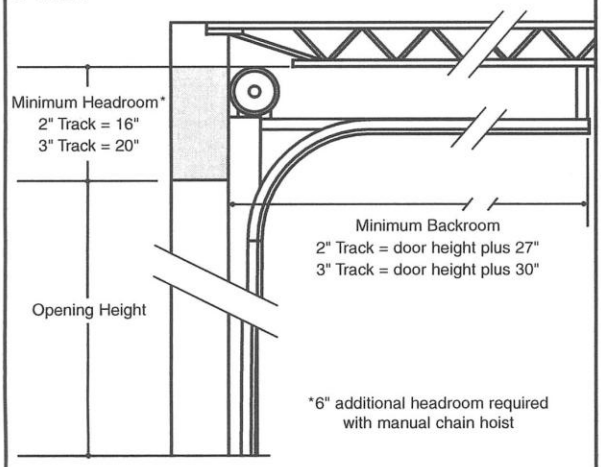

Lift Clearance

2" Track
3" Track

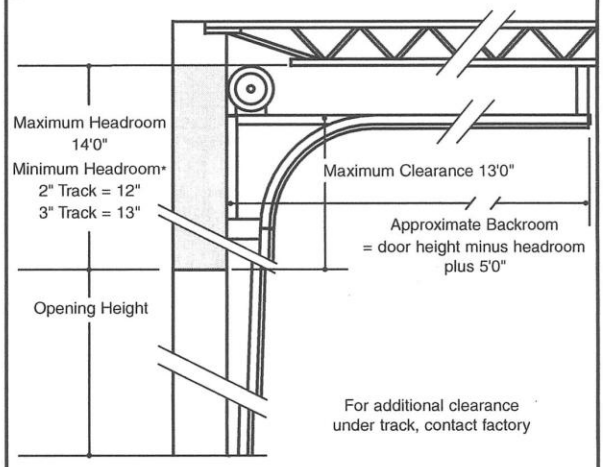

Rear Mount Low Headroom

2" Track
3" Track

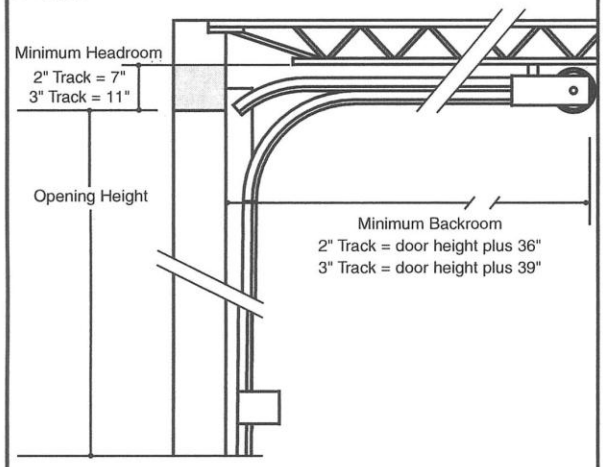

Front Mount Low Headroom

2" Track
3" Track

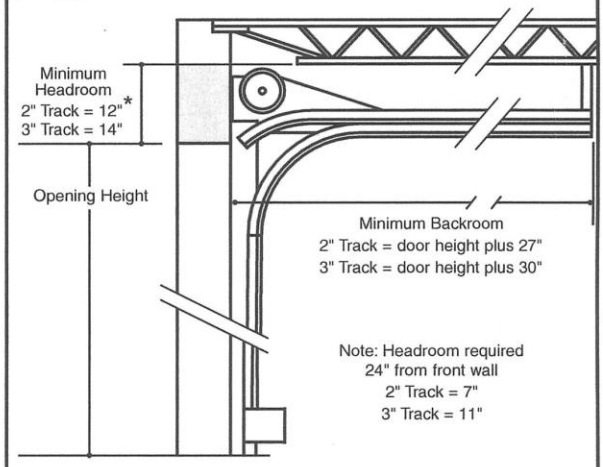

Vertical Lift

2" Track
3" Track

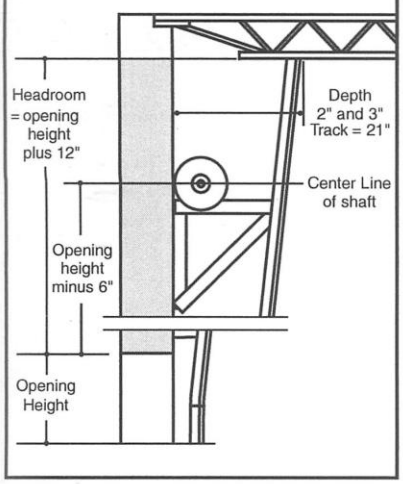

Vertical Lift

A-Type Track

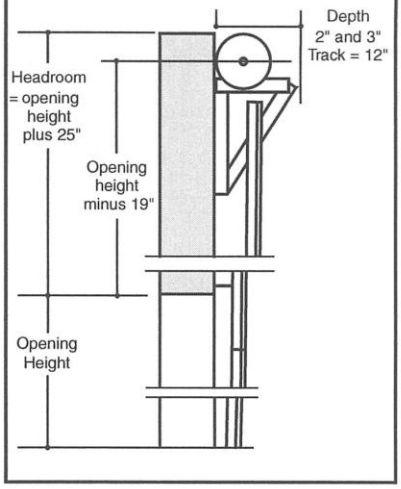

Normal Headroom / Single Incline
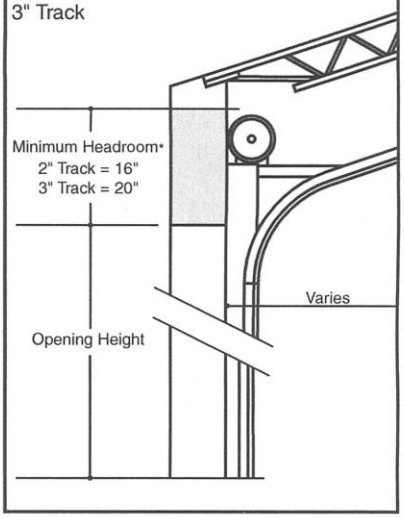
2" Track
3" Track